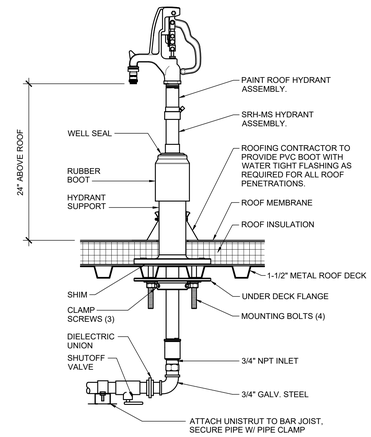

7 A5.0 ROOF HYDRANT INSTALLATION
SCALE: 1 1/2" = 1'-0"

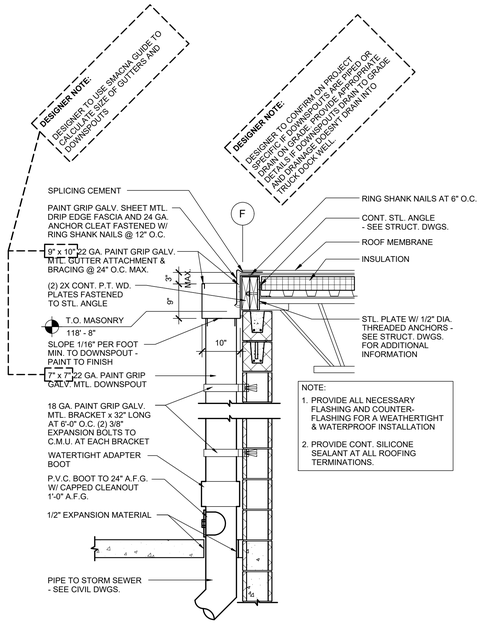

6 A5.0 TYPICAL GUTTER / DOWNSPOUT
SCALE: 3/4" = 1'-0"

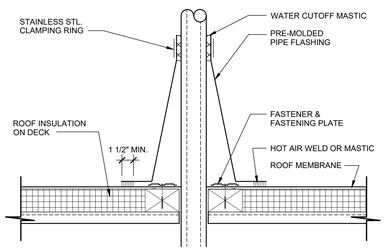

5 A5.0 VENT DETAIL
SCALE: 1 1/2" = 1'-0"

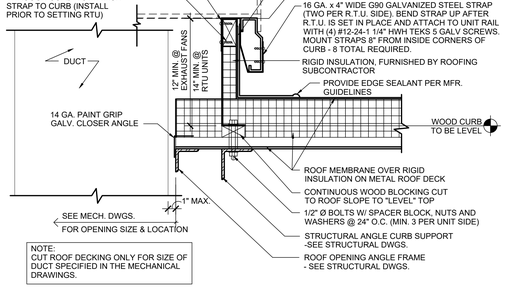

4 A5.0 TYP. CURB AT RTU & EXHAUST FANS
SCALE: 1 1/2" = 1'-0"

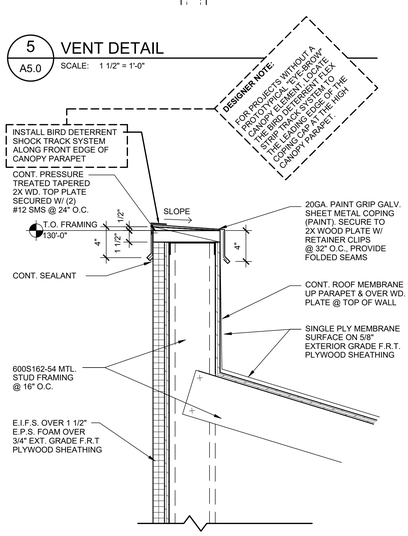

3 A5.0 PARAPET AT ENTRY
SCALE: 1 1/2"=1'-0"

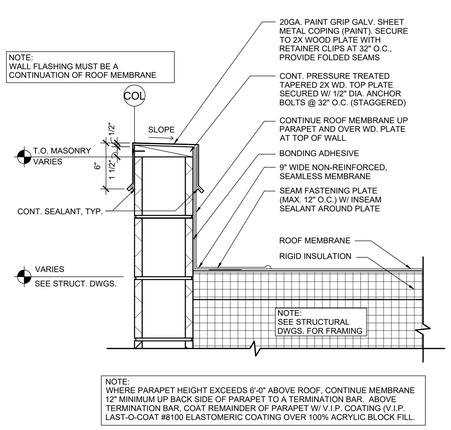

2 A5.0 DETAIL AT PARAPET
SCALE: 1 1/2" = 1'-0"

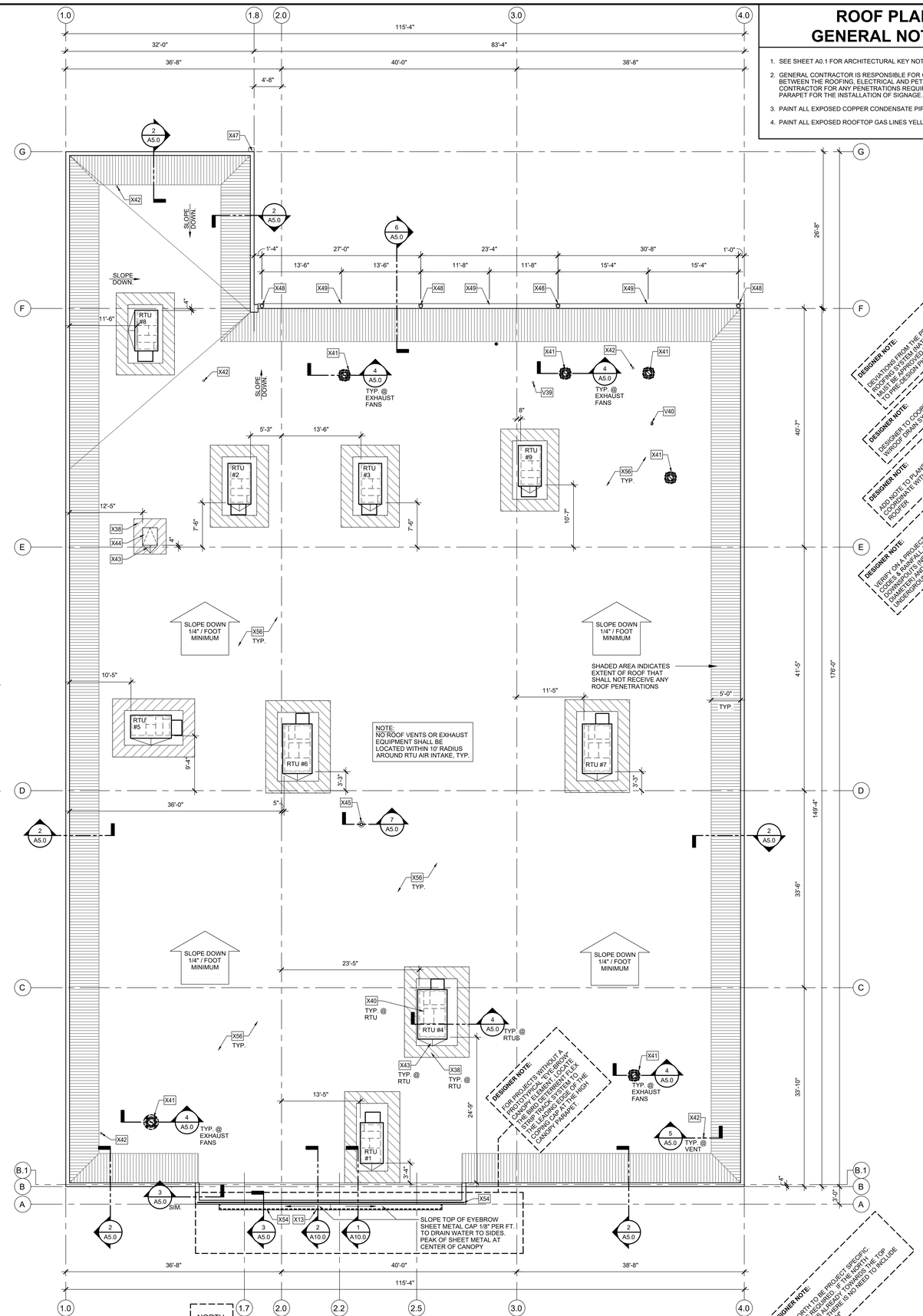

1 A5.0 ROOF PLAN
SCALE: 1/8"=1'-0"

ROOF PLAN GENERAL NOTES:

1. SEE SHEET A0.1 FOR ARCHITECTURAL KEY NOTES.
2. GENERAL CONTRACTOR IS RESPONSIBLE FOR COORDINATION BETWEEN THE ROOFING, ELECTRICAL AND PETSMART SIGNAGE CONTRACTOR FOR ANY PENETRATIONS REQUIRED IN THE ROOF OR PARAPET FOR THE INSTALLATION OF SIGNAGE.
3. PAINT ALL EXPOSED COPPER CONDENSATE PIPING WHITE.
4. PAINT ALL EXPOSED ROOFTOP GAS LINES YELLOW

TENANT:
PETSMART
19601 North 27th Avenue
Phoenix, Arizona 85027 - (623) 580-6100

PROJECT:
18K 2025 U.S. VET SERVICES INSTRUCTION SET

FEBRUARY 12, 2025

ARCHITECT:

CONSULTANT:

SEAL:

CITY SEAL:

DISCLAIMER:
THIS DRAWING AND DESIGN IN COPYRIGHT PROTECTED WHICH SHALL NOT BE USED, REPRODUCED OR REVISED WITHOUT WRITTEN PERMISSION BY PETSMART. THE CONTRACTOR SHALL CHECK AND VERIFY ALL DIMENSIONS AND UTILITY LOCATIONS AND REPORT ALL ERRORS AND OMISSIONS PRIOR TO COMMENCING WORK.
THIS DRAWING IS NOT TO BE SCALED.

ISSUED FOR:

#	DESCRIPTION	DATE

PROJECT NO: 18K 2025 US INSTRUCTION SET
ORIGINAL SCALE: AS INDICATED
DRAWN BY: XXX
CHECKED BY: XXX
PAGE #: 01 OF: 56
IF THIS BAR IS NOT 1" LONG, ADJUST YOUR PLOTTING SCALE 1"
DISCIPLINE: ARCHITECTURAL

TITLE:
ROOF PLAN

SHEET NUMBER:
A5.0